TEAR SHEET

Perry Medium Linear Pendant

Item # RL 5075NB-FA

Designer: Ralph Lauren

O/A Height: 25"
Fixture Height: 5"
Min. Custom Height: 10"
Width: 55" x 18"
Canopy: 7" x 25.5" Rectangle
Finishes: NB, PN
Glass Options: WG
Shade Details: Frosted Acrylic
Socket: 16 - E26 Keyless
Wattage: 16 - 40 T10
Weight: 66 Pounds

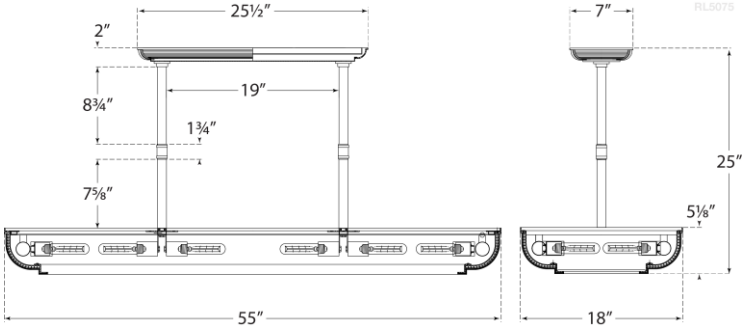

RALPH LAUREN