Ancram Medium Uplight Chandelier

Natural Brass and Aged Iron

- Socket: 6 - E26 Keyless
- Wattage: 6 - 12 LED A19
- Weight: 25 Pounds
- Fixture Height: 10.25”
- Min. Custom Height: 17”
- Note: UL Only

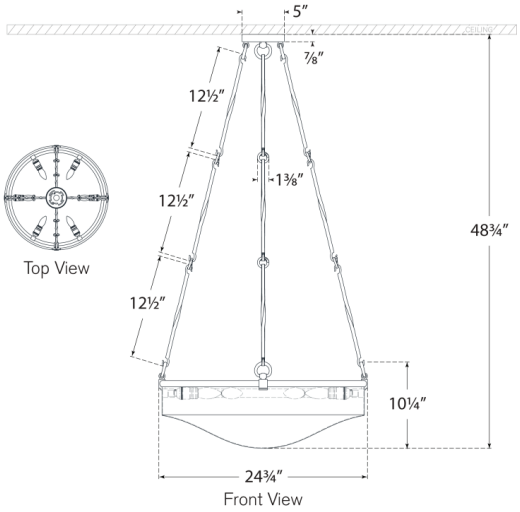

Measurements

RL 5785NB/AI

24.75"W x 48.75"H x 5" Round Canopy | 62.8W x 123.8H x 12.7 CM

RALPH LAUREN