TEAR SHEET

Alaster Task Lamp
Item # RL 3172PN/BKE

Designer: Ralph Lauren

Height: 12.5" - 21.5"
Width: 6.25"
Extension: 12.5" - 20.5"
Base: 6.5" Round
Finishes: NB/NRO, PN/BKE
Shade Treatments: NB, PN
Socket: Dedicated LED w/ Dimmer on Base
Wattage: 15w (1600lm)
Weight: 12 Pounds

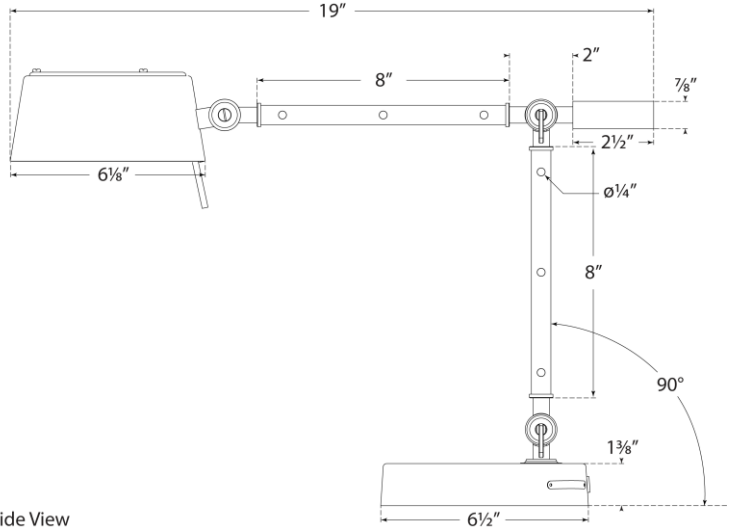

Side View

RALPH LAUREN

DRY LED