TEAR SHEET

Daley Small Linear Sconce

Item # RL 2320PN-CG

Designer: Ralph Lauren

Height: 12"
Width: 4.25"
Extension: 2.5"
Backplate: 4.25" x 11.5" Rectangle
Finishes: NB, PN
Glass Options: CG
Socket: Dedicated LED
Wattage: 8w (1280lm)
Weight: 7 Pounds

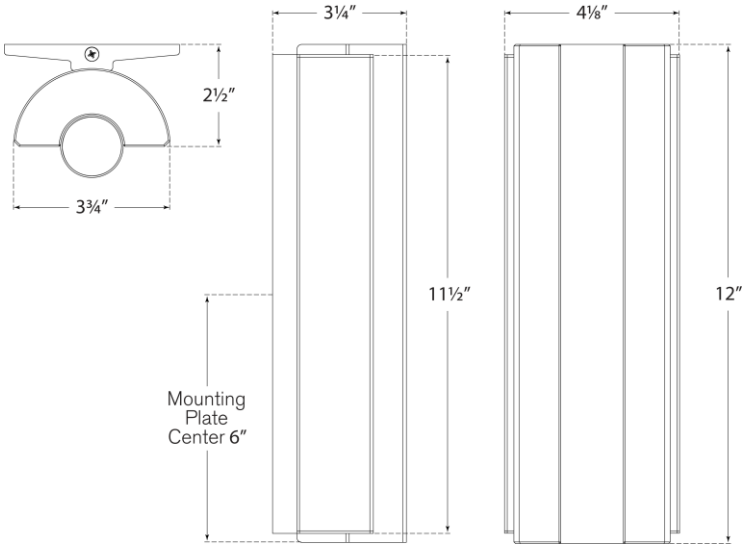

RALPH LAUREN

DAMP LED 4